版本:X1

ECN. NO.	REV.	DATE	DESCRIPTION	CHANGE	APPD.
	X1	08/17'2015	初版发行	/	

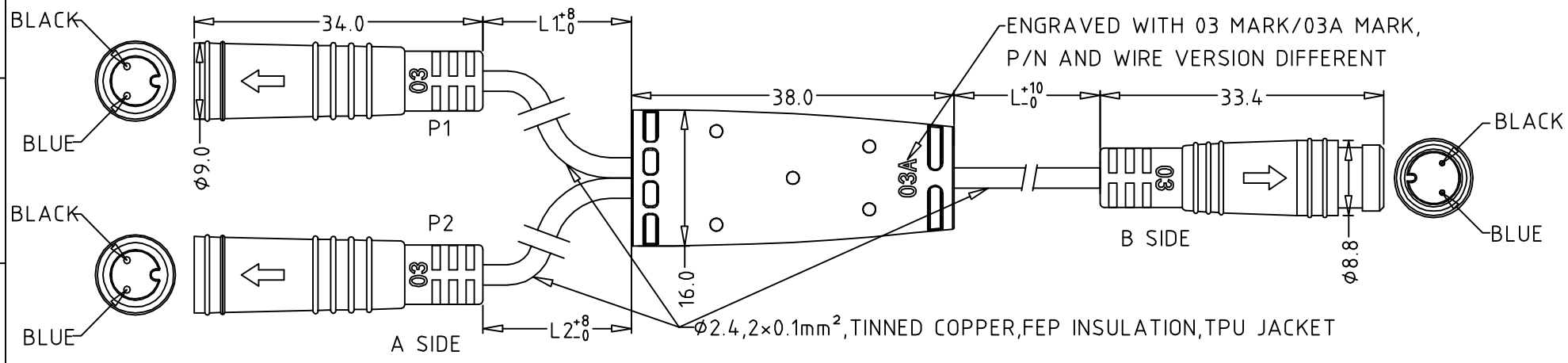

L = 1200 mm

L1 = 50 mm

L2 = 50 mm

1.Electrial Characteristics:
 1.1:Low level contact resistance:10milliohm Max.
 1.2:Directric withstanding voltage:500VAC.
 1.3:Insulation resistance:20megaohm Min.
2.Mechanical Characteristics:
 2.1:Durability:200cycle.
3.Performance:
 3.1:Voltage rating:48V AC,60V DC.
 3.2:Current rating:
  2Amps (Φ0.6pin and socket).
 3.3:Operation temperature:-25°C~+80°C.
4.Requirement:
 4.1:Enviromental pratection,accord ROHS 2.0.
5.Applicable wire:
 Φ0.6 Contact:0.2mm² MAX.
6.Degree of protection:
 IP66 in mated condition

PART NO.	MARK	NO.	A SIDE P1	A SIDE P2	B SIDE
5300.0110	03A	1	BLACK	BLACK	BLACK
		2	BLUE	BLUE	BLUE
					-

MAT'L: N/A	Higo 上海海固电器设备有限公司 Shang hai Higo Electronic Technology Co., Ltd.			
UNITS: mm	TITLE: 1T2 CABLE	PART NO.:		
X.±: 8 / X°.±: 5°	APPD:	DWG NO.:		
.X±: 0.5 / .X°±: 2°	CHED:			
.XX±:0.05 / .XX°±:1°	DRAW: Gary zhou 08/17'2015	SCALE N/A	SHEET 1/1	REV.